Maintenance of grouted ground and rock anchors

Deryck Chan (FIBE-CDT) | Industry partner: Sergio Solera (Mott MacDonald)

1 Introduction

Grouted anchors are regularly installed in the UK to support structures and slopes by transmitting a tensile force to a load-resisting formation of soil or rock.[1] The schematic cross-section of a typical grouted anchor is shown in Figure 1. Ongoing maintenance is vital to their long-term performance, particularly for pre-stressed anchors, but the maintenance regimes vary wildly from one asset to another.

The British code of practice for grouted anchors, BS 8081, was revised in 2015 to align with Eurocode 7, so it is timely to review current practices in anchor maintenance and recommend improvements.

This desktop study will contribute to the CIRIA research proposal P2618 on condition appraisal and remedial treatment of ground anchors in service.

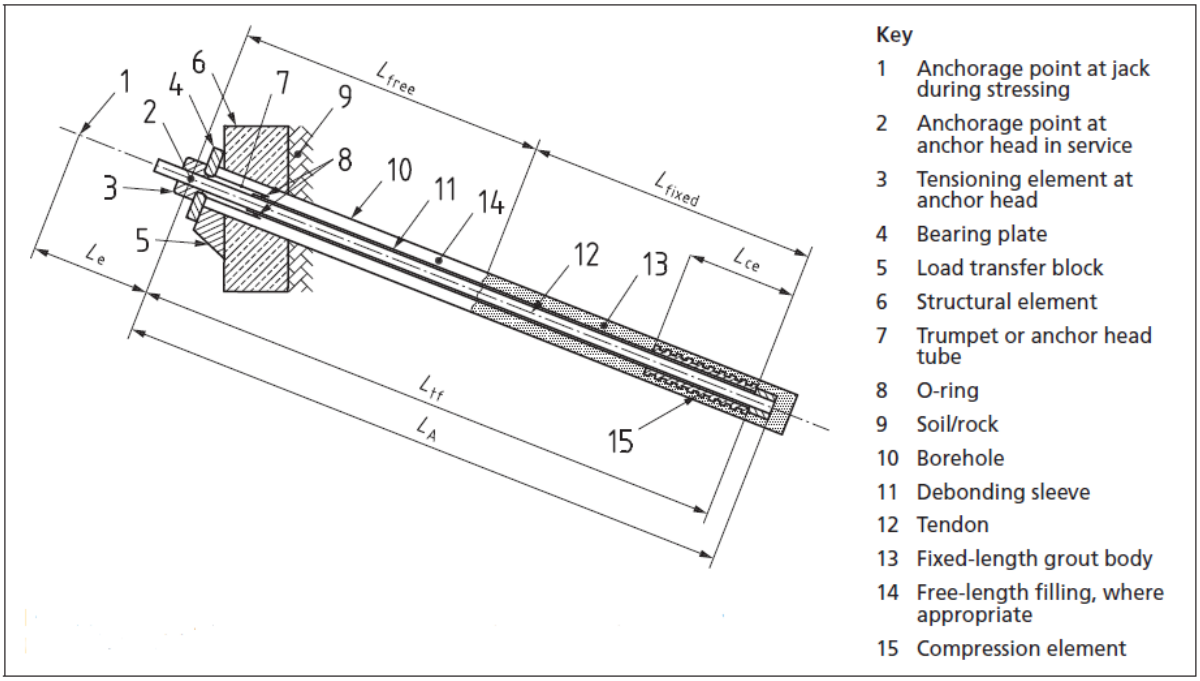

Figure 1: Schematic diagram of a grouted anchor, from BS 8081:2015. This diagram shows a compression-type grouted anchor; details of anchor head and head protection are omitted.

2 Literature review

2.1 Standard and codes

BS 8081:1989 was the first code of practice on grouted anchors in the UK. It is also used internationally, particularly in English-speaking countries. It provided extensive guidance on the design and construction of grouted anchors. Most grouted ground and rock anchors currently in use in the UK have been designed to this code.

[1] BS EN 1997-1:2004+A1:2013 section 8.1.1

The 1989 code provided some guidance on maintenance measures which focused on corrosion protection, monitoring, and testing.[2] Some guidance is given to help determine the appropriate monitoring regime:

- The criteria that determine the need for in-service monitoring emphasise the likely damage in the case of failure. Half of the criteria depend on the consequence of anchor malfunction and consequent structural failure, rather than the property of the ground and the anchors themselves.[3]
- The frequency of monitoring depends on the purpose. To prevent failure due to corrosion, testing should be carried out at 6-month intervals initially or more frequently, increasing to up to every 5 years in the long term.[4]
- Rules for sampling anchors during an inspection were specified. "At least 10% or three anchors, whichever is the greater number, should be monitored on projects with less than 100 anchors. On larger projects, at least a further 5% of the excess over 100 should be monitored."[5]

With the introduction of Eurocodes in the 2000s, the standard was revised to harmonise with Eurocode 7 Geotechnical Design. BS 8081:2015 was released as the successor. The official terminology of "ground anchorages" was replaced by "grouted anchors". In terms of monitoring and maintenance, the clauses on reporting were split into a new section and the detailed guidance for in-service monitoring was moved to an informative appendix,[6] but the substance of those sections remained largely unchanged. The relevant European Standard, EN 1537:2013, does not provide this level of detail.[7]

In practice, the maintenance regimes of grouted anchors are often incorporated into the maintenance plans of assets which have very different underlying standards. For example, Highways in the UK use the following:[8]

- BD 63/07 Inspection of highway structures
- HD 22/08 Managing geotechnical risk
- HD 41/15 Highway geotechnical assets

This has led to a fragmentation of maintenance regimes, which will be discussed in Section 3.4 below.

2.2 Published reviews of current practice

Littlejohn & Mothersille (2008) reviewed cases of grouted anchor failure and current codes of practice in anchor maintenance around the world. The following findings of theirs are of particular relevance to this desktop study:

[2] BS 8081:1989 section 12; cf. BS 8081:2015 section 16
[3] BS 8081:1989 clause 11.5.2; cf. BS 8081:2015 appendix G.5.2
[4] BS 8081:1989 clause 11.5.3; cf. BS 8081:2015 appendix G.5.3
[5] BS 8081:1989 clause 11.5.4; cf. BS 8081:2015 appendix G.5.4
[6] BS 8081:1989 clause 12.5 "Records" became BS 8081:2015 section 17 "Reporting"; BS 8081:1989 clause 11.5 "Monitoring service behaviour of anchorages" became BS 8081:2015 appendix G.5 "Monitoring the service behaviour of anchors"
[7] Both Eurocode 7 UK national annex (2013) and BS 8081:2015 refer to a forthcoming standards document, ISO 22477-5, which is expected to provide detailed guidance on grouted anchor maintenance. However, ISO 22477-5 has not been published at the time of writing.
[8] These items form parts of the Design Manual for Roads and Bridges.

- Corrosion is the predominant cause of grouted anchor failure. Depending on operating conditions, corrosion and failure may occur in any metallic part of the anchor.
- The anchor head is particularly vulnerable. Anchor head caps are often installed for additional protection against corrosion.
- Many jurisdictions have national codes that recommend certain sampling regimes, similar to the provisions of BS 8081. However, the exact recommendations differ. There is no standardisation across the European Union.
- Littlejohn & Mothersille highlighted the case of Hong Kong, where grouted anchors are widely deployed to support critical infrastructure. The Hong Kong code (Geospec 1) classifies anchors into three risk categories, each with its prescriptive maintenance regime. (Figure 2)
- They concluded that excellent guidance on anchor maintenance is available, but suspected that very few projects follow the guidance rigorously.

Risk category	Frequency of visual survey	Monitoring of individual anchorages		
		No. of anchorages*	Frequency of anchorage inspection and residual load measurement	Extent and frequency of special grease checks†
High‡	Weekly (up to end of maintenance period) and every 6 months thereafter	15% of first 50 anchorages 12% of second 50 anchorages 10% of additional anchorages	2 weeks, 1 month, 3 months, 6 months, 9 months, 1 year, 18 months, 2 years, and every year thereafter	Three anchorages 2 years, 5 years and every 5 years thereafter
Low§	Fortnightly (up to end of maintenance period) and annually thereafter	10% of first 50 anchorages 7% of second 50 anchorages 5% of additional anchorages	2 weeks, 1 month, 3 months, 6 months, 9 months, 1 year, 18 months, 2 years, and every 2 years thereafter	Two anchorages 2 years, 5 years and every 5 years thereafter
Negligible¶	Monthly (up to end of maintenance period) and annually thereafter	7% of first 50 anchorages 3% of additional anchorages	2 weeks, 1 month, 3 months, 6 months, 9 months, 1 year, 18 months, 2 years, 5 years and every 5 years thereafter	One anchorage 2 years, 5 years and every 5 years thereafter

Figure 2: Maintenance plan options for grouted anchor maintenance in Hong Kong, as summarised in Littlejohn & Mothersille (2008) p.104

Graham, Solera & Sanchez (2015) investigated a case of grouted anchor failure in Wales in 2002. They found that the as-built details around the anchor head were incorrect, causing failure due to corrosion, despite the fact that the anchor was designed to BS 8081:1989 which required double corrosion protection. This case raised further questions about the prevalent standard of workmanship, along the lines of Littlejohn & Mothersille's suspicion. (This desktop study was in part prompted by the findings of Graham et al.)

3 Industry survey

3.1 Overview of survey

This study requested information from various industry partners in grouted anchor maintenance. Responses were received from representatives of eight organisations, including public authorities, contractors, and consultant engineers. The names and affiliations of respondents are given in the Acknowledgements section.

Respondents provided general comments about current practices in grouted anchor maintenance, plus technical information from 17 projects involving grouted anchors. The information covered

current practices in various regions of Great Britain and Ireland. The number of anchors per project vary from 4 to over 1000. For confidentiality reasons, names of projects and clients are omitted from this report. A summary of the types and locations of these projects is given in Figure 3.

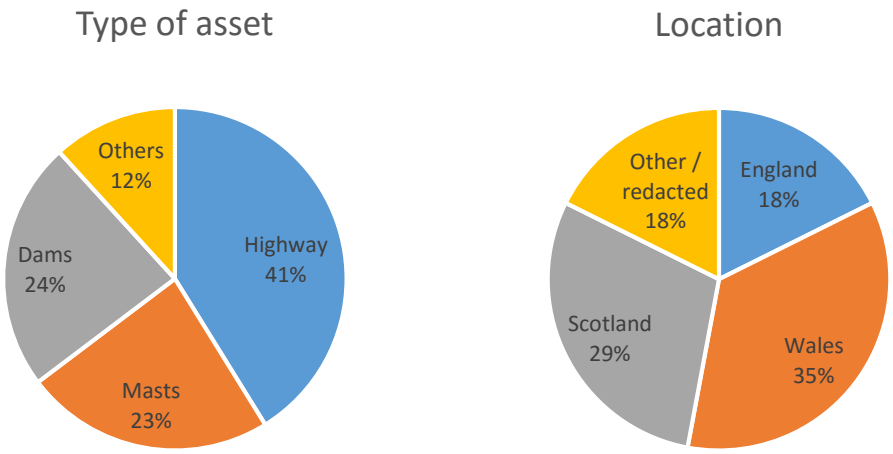

Figure 3: Types and locations of assets in this survey

3.2 Frequency of inspection

Where the inspection regime is known, the frequency of inspection is summarised in Figure 4. This pie chart only shows projects whose maintenance requirements are known, so in reality the proportion of grouted anchors without regular inspections would be much higher.

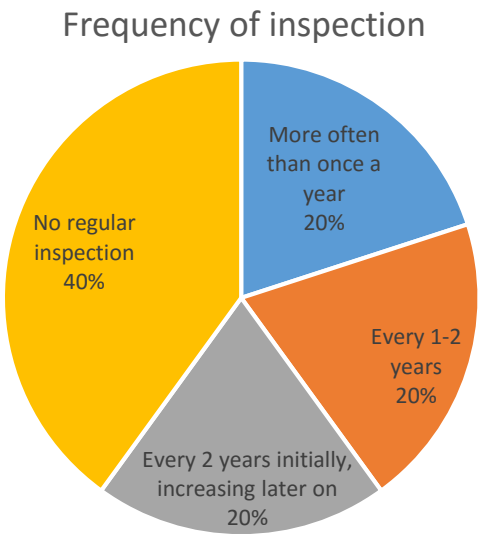

Figure 4: This pie chart shows the frequency of inspection of grouted anchors in this survey, where available.

Where a frequency of inspection is prescribed, the frequency is typically every 1 – 2 years in the first few years after the construction of the asset, rising to about 5 years afterwards. In some inspection regimes, a "rough" inspection is carried out at every inspection, with "detailed" inspections or mechanical tests occurring at a lower frequency. This is best illustrated with examples:

- **Example 1:** Monobar anchors and multi-strand anchors support a highway cutting. Every 2 years, 10% of anchors are inspected visually and their loads established either by gauges or mechanical testing. After 10 years, the frequency can be increased to every 5 years.
- **Example 2:** Monobar anchors support a cutting into rock. A representative sample of about 20% of anchors is inspected and check-lifted every 2 years. After 6 years, the frequency can be increased to every 6 years. Every 20 years, all anchors are check-lifted.

3.3 Types of inspection

Maintenance inspections of grouted anchors generally fall into four categories, each representing a greater degree of intervention than the previous:

- **Proxy measures:** reliance on external signs of distress or survey of structural movement
- **Visual inspection:** uncover anchors to check tightness, corrosion, and grease leakage
- **Gauges:** Load cells, or photoelastic modulators for older anchors, are attached to a grouted anchor during installation. The load on an anchor is read during an inspection.
- **Mechanical testing:** an anchor is mechanically tested by a jack to measure the existing load (known as "check-lift" or "lift-off test"). The load may be increased to a proof-load to confirm the integrity of the anchor, then "locked off" at the preferred design load.

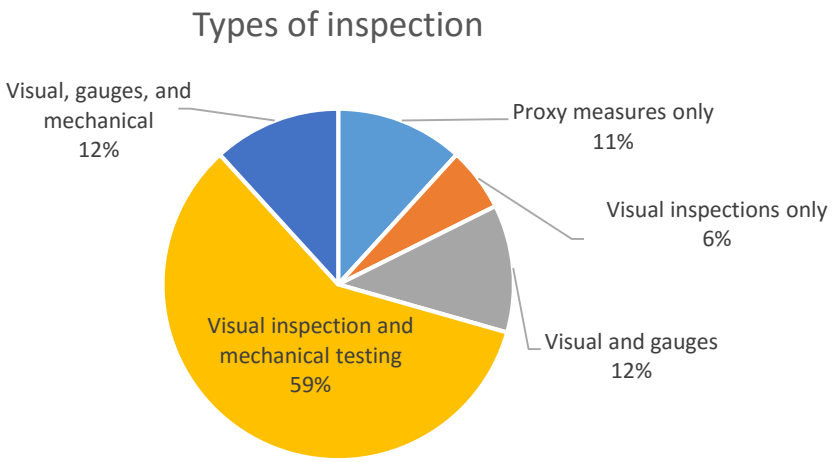

Figure 5: This pie chart shows the proportion of projects in this study using each type of inspection technique.

Figure 5 suggests that there is an emphasis on mechanical testing in maintenance inspections. Some respondents suggested that this emphasis may be misguided: "Whilst load-checking is occasionally specified, regular inspection and maintenance of the anchor head is rarely specified or undertaken. Yet this is one of the most vulnerable parts of the entire anchor, either to corrosion or physical damage."[9] Mechanical tests also poses the risk of damaging the anchor head, so they should be used sparingly.

[9] Graham Thompson (Bachy Soletanche), *private communication*

3.4 Comments on maintenance regimes

The inspection frequency and regime varies significantly between projects. In one case study in this survey, the grouted anchors supported an excavation in London; the client would read the load cells of the anchors "every four weeks or whenever a major excavation takes place". In another case, the anchors supported a retaining wall in a rural area, and "no maintenance activity is anticipated unless the walls show signs of movement".

The current codes of practice necessarily lead to a fragmentation of maintenance regimes. The choice of regime best-described as "down to mission criticality",[10] as the stipulations of BS 8081 focus heavily on evaluating the likely consequences of anchor failure. In addition, most asset owners reported that the maintenance of grouted anchors currently falls within the investigation regimes of the asset which they support, such as structure maintenance plans and geotechnical maintenance plans. Hence the same type of anchor may fall under very different inspection regimes in different projects.

Furthermore, current contractual arrangements lead to a split of responsibilities which is unconducive to rigorous anchor maintenance regimes. Typically, the consultant engineer designs the anchors and recommends inspection regimes, but the responsibility of maintenance rests with the client. The client then hires a specialist contractor. Some contractor engineers opined that this arrangement should be changed, because specialist anchor installers are best placed to undertake inspection and maintenance works, so they should assume the long-term responsibility of executing the maintenance regime.

Several public sector respondents also commented that many existing anchors have been in place for many decades and information about them is incomplete. Inspection regimes are being instigated to record and maintain geotechnical assets such as grouted anchors as they are rediscovered.

Most stakeholders opined that they would like to see some standardisation of grouted anchor maintenance regimes, to guarantee the long-term safety of assets. They expressed disappointment that BS 8081:2015 remained vague in terms of maintenance stipulations.[11] In light of the findings of this desktop study, preliminary recommendations are made in the next section.

4 Recommendations

- **Propose a portfolio of different maintenance plans for stakeholders to choose from.** Because standardisation is desired but "mission criticality" determines maintenance decisions, a range of standardised maintenance plans should be proposed,[12] so that each project may choose its preferred regime based on its needs.
- **Whatever the maintenance regime is, record-keeping and supervision are essential.** Standardised record forms may be issued as part of the maintenance plans described above. It may be desirable to recommend that records be filed with an industry-wide standards body.
- **Anchor head protection is more important than load testing.** In-service inspections should focus on the condition of the anchor head and corrosion protection, as these are the most critical parts of a grouted anchor.

[10] Richard Shires (Highways England), *private communication*

[11] CIRIA: Industry comments on proposal P2618 Grouted Anchors – Condition Appraisal and Remedial Treatment

[12] Say, some 10 different plans ranging from "no maintenance is expected unless abnormal movement is observed", to something akin to the "high-risk" plan in Figure 2

- **Load cells should be more widely used with grouted anchors.** Mechanical tests may damage anchors, whereas load cells provide a non-intrusive means of measuring the existing load. As the cost of instrumentation is expected to continue declining, load cells should become the prevalent means of load monitoring for grouted anchors, with mechanical tests used sparingly to complement load cell readings.
- **Long-term contracts can be used to facilitate anchor maintenance.** As build-and-operate contracts become more commonplace, the maintenance of grouted anchors should be enshrined into these contracts, to ensure that the specified maintenance regime is adhered to.

5 Acknowledgements

We would like to thank the following industrial partners for their input to this desktop study:

- Amey Local Government
- Derval Delargy, Raymond Glass and John McRobert, Transport Northern Ireland
- Graham Thompson, Bachy Soletanche
- Geoffrey Doherty, Gwynedd Council
- Lee Kelly, CIRIA
- Martin McLaughlin, Transport Scotland
- Miles Friedman, Transport Infrastructure Ireland
- Owen Francis and David Gibson, BAM Ritchies
- Richard Shires, Highways England

6 References

1. BS 8081:1989, *Code of practice for ground anchorages*, British Standards Institution
2. BS 8081:2015, *Code of practice for grouted anchors*, British Standards Institution
3. BS EN 1537:2013, *Execution of special geotechnical works — Ground anchors*, British Standards Institution
4. BS EN 1997-1:2004+A1:2013, Eurocode 7. Geotechnical design. General rules. British Standards Institution
5. CIRIA (2015*): Grouted (Ground) Anchors - condition appraisal and remedial treatment*, research proposal P2618
6. *Design Manual For Roads And Bridges*, Highways England, Transport Scotland, Welsh Government, and Department for Regional Development Northern Ireland. Accessed via http://www.standardsforhighways.co.uk/dmrb/ on 3 March 2016
7. Geospec 1: *Model specification for prestressed ground anchors*, Geotechnical Engineering Office, Civil Engineering Department, Hong Kong, 1997
8. Graham J.R., Solera S.A., Sanchez C. (2015): *Investigation of rock anchorage failures and cutting remediation at Glyn Bends, North Wales, UK*, Proceedings of the XVI ECSMGE Geotechnical Engineering for Infrastructure and Development
9. Littlejohn S., Mothersille D. (2008): *Maintenance and monitoring of anchorages: guidelines* , Proceedings of the Institution of Civil Engineers, Geotechnical Engineering 161, April 2008 Issue GE2, pages 93–106, doi:10.1680/geng.2008.161.2.93